DTCA230-37C

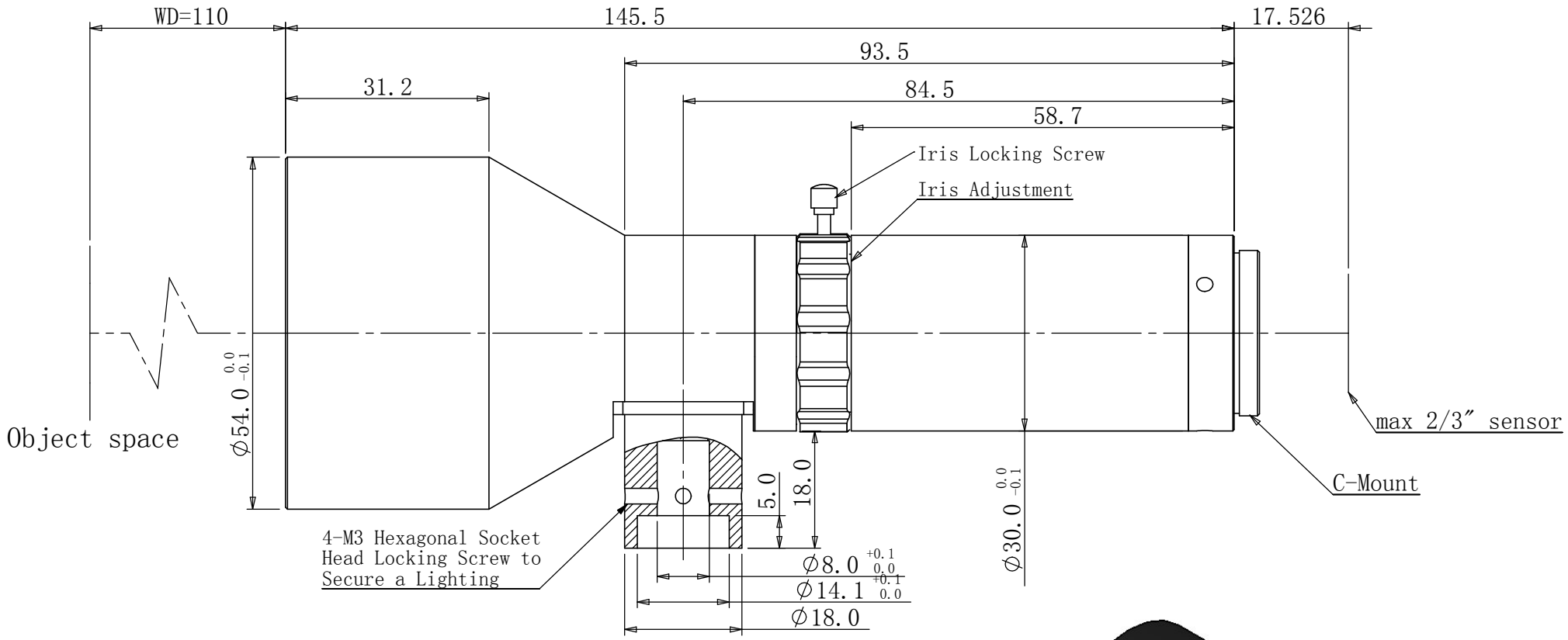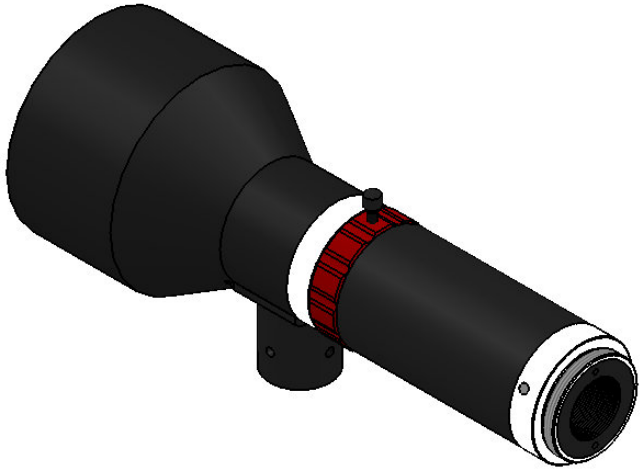
WD=110
145.5
17.526
93.5
31.2
84.5
58.7
Iris Locking Screw
Iris Adjustment
Object space
Φ54.0 0.0 -0.1
max 2/3″ sensor
C-Mount
5.0
18.0
Φ30.0 0.0 -0.1
4-M3 Hexagonal Socket
Head Locking Screw to
Secure a Lighting
Φ8.0 +0.1 0.0
Φ14.1 +0.1 0.0
Φ18.0